Hall Ticket Number :										

Code: 5G121

R-15

I B.Tech. II Semester Supplementary Examinations December 2017

C Programming and Data Structures

(Common to All Branches)

Max. Marks: 70 Time: 3 Hours

Answer *all five* units by choosing one question from each unit (5 x 14 = 70 Marks)

****

UNIT–I

1. a) Write short notes on Pointer expression and pointer arithmetic. 7M

   b) Write a 'C' program to implement Dynamic Memory Allocation concept. 7M

OR

2. a) Define pointer increments and scale factor. Give two examples for each. 7M

   b) Write a 'C' program to declare an array and a pointer and access the values of the array variable using the pointer. 7M

UNIT–II

3. a) Write short notes on

   i) Dot operator(.)

   ii) Arrow operator(->) 7M

   b) Write a 'C' program to open a file and read a text using getc() function. Using putc() function print the same text on the screen. 7M

OR

4. a) What is the logic behind in Exchange sort technique? Sort the following elements using it.

   68 45 12 98 51 73 44 5 7M

   b) List out any 7 standard library functions for files and discuss their meanings. 7M

UNIT–III

5. a) How to convert an Infix expression into a Postfix expression, explain.

   Convert the following infix expression into postfix expression

   (A+B)*(C-D)/E 7M

   b) Write a 'C' program to implement the stack operations using Linked list. 7M

OR

6. a) What are the various operations can be performed on a circular queue, explain. 7M

   b) Write a 'C' program to implement the Queue operations using Arrays. 7M

UNIT–IV

7. Discuss the following operations on a Single Linked List with proper diagrams.

   i). Copying a single linked list Ii). Merging two single linked lists 14M

   iii).Deletion at all positions.

OR

8. How to represent a doubly linked list? Write the algorithms to insert and delete operations in doubly linked list. 14M

UNIT–V

9. What are the Traversal operations possible on a Binary tree? Write the algorithms for all traversal operations. 14M

OR

10. Write detailed notes on the following representation of a graph

    i). Set representation

    ii). Linked List representation

    iii). Matrix representation 14M

***

Hall Ticket Number :										

Code: 5GC24

R-15

I B.Tech. II Semester Supplementary Examinations December 2017

Engineering Mathematics-II

(Common to All Branches)

Max. Marks: 70 Time: 3 Hours

Answer *all five* units by choosing one question from each unit (5 x 14 = 70 Marks)

****

UNIT–I

1. Change the order of integration in $\int_0^1 \int_x^{\sqrt{2-x^2}} \frac{x}{\sqrt{x^2+y^2}} dydx$ and hence evaluate it. 14M

OR

2. a) Evaluate $\int_0^a \int_0^x \int_0^{x+y} e^{x+y+z} dzdydx$ 7M

b) Find the area of the plate in the form of a quadrant of the ellipse $\frac{x^2}{a^2}+\frac{y^2}{b^2}=1$ 7M

UNIT–II

3. a) Find the Laplace transform of $\int_0^t \frac{e^{-t}\sin t}{t} dt$ 7M

b) Evaluate $\int_0^\infty te^{-2t}\cos t dt$ 7M

OR

4. a) State and prove Convolution Theorem 7M

b) Using Convolution Theorem find $L^{-1}\left\{\frac{s}{(s^2+a^2)^2}\right\}$ 7M

UNIT–III

5. Using Laplace transforms solve $\left(D^3-3D^2+3D-1\right)y=t^2e^t$ given that $y(0)=1, y^1(0)=0, y^{11}(0)=-2$ 14M

OR

6. Using Laplace transforms solve $ty^{11} + 2y^1 + ty = \text{Cos } t$ given that y(0)=1 14M

UNIT–IV

7. a) Find the directional derivative of $f(x,y,z) = xy^2 + yz^3$ at the point (2, -1,1) in the direction of the vector $\vec{i}+2\vec{j}+3\vec{k}$ 7M

b) If $u\vec{F}=\nabla v$, where u, v are scalar fields and $\vec{F}$ is a vector field, show that $\vec{F}.curl\vec{F}=0$ 7M

OR

8. Evaluate the line integral $\int_c (x^2+xy)dx+(x^2+y^2)dy$ where C is square formed by the lines $y=\pm 1$ and $x=\pm 1$ 14M

UNIT–V

9. Verify Green's Theorem for $\int_c \left[(xy+y^2)dx+x^2dy\right]$ where C is bounded by $y=x$ and $x=x^2$ 14M

OR

10. Verify Stokes Theorem for vector field defined by $\vec{F}=-y^3\vec{i}+x^3\vec{j}$ in the region $x^2+y^2\le 1, z=0$ 14M

***

Hall Ticket Number :										

Code: 5GC22

R-15

I B.Tech. II Semester Supplementary Examinations December 2017

Engineering Chemistry

(Common to EEE & ECE)

Max. Marks: 70 Time: 3 Hours

Answer *all five* units by choosing one question from each unit (5 x 14 = 70 Marks)

****

UNIT–I

1. a) What is the principle of EDTA titration? Briefly describe the estimate of hardness of water by EDTA method. 10M

   b) What are the advantages of break-point chlorination? 4M

OR

2. a) Explain the boiler troubles, scale and caustic embrittlement in details. 8M

   b) Why is calgon conditioning better than phosphate conditioning? 6M

UNIT–II

3. a) How is NICAD battery constructed? Explain with cell reaction. 7M

   b) Write a brief note on H_2-O_2 fuel cell. 7M

OR

4. a) Discuss the mechanism of chemical and electrochemical corrosion. 7M

   b) Write a brief note on cathodic protection methods. 7M

UNIT–III

5. a) What is synthetic rubber? Is vulcanization essential for all synthetic rubbers? 7M

   b) Distinguish thermoplastics and thermosetting plastics. 7M

OR

6. a) Discuss the preparation, properties and uses of Buna-S rubbers. 7M

   b) What are conducting polymers? Discuss possible categories of conducting polymers with suitable examples. 7M

UNIT–IV

7. a) Calculate the gross and net calorific values of coal having the following compositions, carbon = 85%, hydrogen = 8 %, Sulphur = 1 %, nitrogen = 2 %, ash = 4 %, latent heat of steam = 587 cal/gm. 6M

   b) Describe the Otto-Hoffman method of coke manufacture and the recovery of various by product. 8M

OR

8. a) What is synthetic petrol? How is it manufactured by Bergius process? 7M

   b) With a neat diagram explain the analysis of flue gas by Orsat apparatus and mention the precautions to be followed during the analysis. 8M

UNIT–V

9. a) Explain the different raw materials and mixing of the raw materials by the dry process during the manufacture of cement. 7M

   b) What are Refractories? Explain Thermal spalling, strength and porosity of the refractories. 7M

OR

10. a) Write short notes on the following properties of lubricants:

    (i) Cloud and Pour point

    (ii) Flash and Fire point. 7M

    b) Explain the classification of explosive.

    (i) Primary or initiating explosives,

    (ii) Low explosives or propellants. 7M

***

Hall Ticket Number :										

Code: 5G523

R-15

I B.Tech. II Semester Supplementary Examinations December 2017

Engineering Drawing-II

(Common to EEE, ECE, CSE and IT)

Max. Marks: 70 Time: 3 Hours

Answer *all five* units by choosing one question from each unit (5 x 14 = 70 Marks)

****

UNIT–I

1. A square lamina PQRS of side 40 mm rests on the ground on its corner P in such a way that the diagonal PR is inclined at 45° to the HP and apparently inclined at 30° to the VP. Draw its projections. 14M

OR

2. A pentagonal plate of side 30 mm rests on the ground on one of its corners with the side containing the corner being equally inclined to the ground. The side opposite to the corner on which it rests is inclined at 30° to the VP and is parallel to the HP. The surface of the pentagon makes 50° with the ground. Draw the plan and elevation of the pentagon. 14M

UNIT–II

3. A pentagonal pyramid of base side 35 mm and axis length 70 mm is freely suspended by means of a string on one of its base corner with its axis parallel to VP. Draw its projection. 14M

OR

4. Draw the projections of a cone, base 40 mm diameter and axis 60 mm long, when it is resting on HP on a point of its base circle with the axis making 45° with HP and parallel to VP. 14M

UNIT–III

5. A hexagonal prism side of base 25 mm and axis 60 mm long lies with one of its rectangular faces on HP such that the axis is inclined at 45° to the VP. Draw the projections. 14M

OR

6. Draw the projections of a cylinder of diameter 45 mm and axis length 60mm when it is lying on the ground with its axis inclined at an angle of 30° to VP and parallel to the ground. 14M

UNIT–IV

7. Draw the isometric projection of cylinder of 50 mm diameter and 70 mm height. 14M

OR

8. A hexagonal prism of base side 20 mm and height 60 mm is resting with its base on HP with two of its rectangular faces parallel to VP. Draw the isometric projection of the prism. 14M

UNIT–V

9. Draw the Orthographic Projections of the plan,elevation and side view for the given figure.

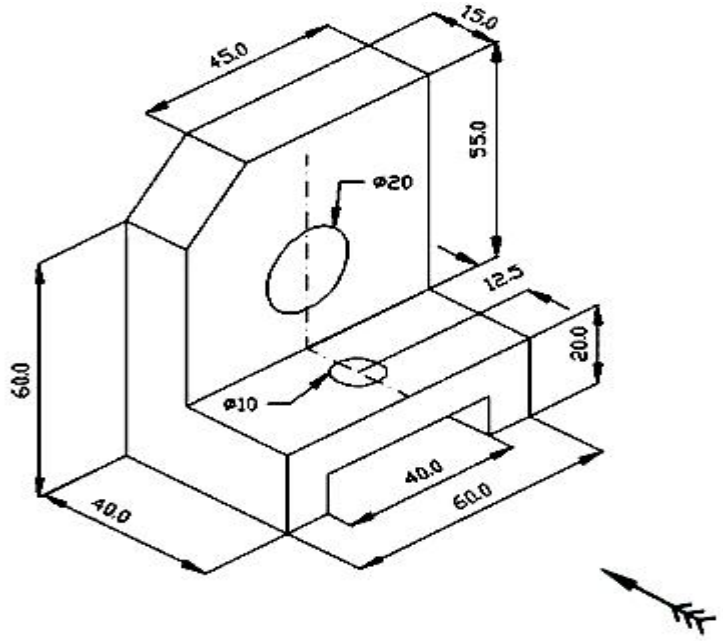

14M

OR

10. Draw the isometric view of the object given below.

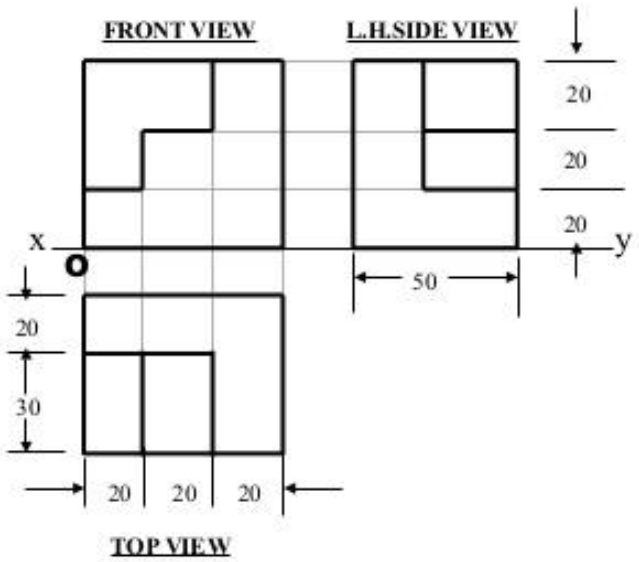

14M

***

Hall Ticket Number :										

Code: 5GC23

R-15

I B.Tech. II Semester Supplementary Examinations December 2017

Engineering Physics

(Common to CE, ME, CSE and IT)

Max. Marks: 70 Time: 3 Hours

Answer *all five* units by choosing one question from each unit (5 x 14 = 70 Marks)

****

UNIT–I

1. a) Explain Newton's rings experiment by reflection to calculate the wavelength of a monochromatic light. 5M

   b) Derive Einstein's coefficients in LASERS. 5M

   c) Write the applications of optical fibers in industries and in medical field. 4M

OR

2. a) Give the theory of Fraunhoffer diffraction due to single slit. 5M

   b) Explain population inversion. Mention important applications of LASERS 4M

   c) Derive the expression for acceptance angle and Numerical Aperture of an Optical fiber. 5M

UNIT–II

3. a) Derive an expression for inter-planar spacing in cubic system. 5M

   b) Define Miller Indices and mention the steps involved. Sketch (110) & (001) the planes in a cube. 5M

   c) Define point defects? Explain different types of point defects. 4M

OR

4. a) Describe with suitable diagram the Laue method of X-ray diffraction and give the consequences 5M

   b) Explain different types of line defects. How the burger's vector is used to find the edge and screw dislocations? 5M

   c) Write note on production of ultrasonics by piezoelectric method. 4M

UNIT–III

5. a) What are matter waves? Explain their properties. 4M

   b) Show that the energies of a particle in 1-D potential box are quantized. Explain the physical significance of wave function. 7M

   c) Calculate the de Broglie wavelength associated with an electron when it is raised to a potential of 1600 V. 3M

OR

6. a) What are drawbacks of classical free electron theory of metals? How are these are removed by the application of quantum states? 5M

   b) Show that the Kronig - Penney model leads to existence energy bands in solids. 5M

   c) Give the classification of solids into metals, semiconductors and insulators on the basis of band theory of solids. 4M

UNIT–IV

7.	a)	Describe drift and diffussion currents in a semiconductor. Derive their expressions.	6M
	b)	Derive the equation of continuity equation for electrons.	5M
	c)	Draw I-V characteristic curve of a PN junction diode and explain.	3M

OR

8.	a)	Explain the origin of magnetic moment in atoms. Find the magnetic dipole moment due to orbital and spin motions of an electron.	5M
	b)	Explain hysteresis of a ferromagnetic materials.	4M
	c)	Explain the classification of magnetic materials.	5M

UNIT–V

9.	a)	Explain Meissner effect. Write notes on magnetic levitation.	5M
	b)	Describe BCS theory of superconductivity.	5M
	c)	Write applications of superconductors.	4M

OR

10.	a)	Explain the basic principles of nanomaterials.	5M
	b)	Describe the process of “sol-gel” and “chemical vapour deposition” method of fabrication of nanomaterials.	6M
	c)	Write the applications of nanomaterials.	3M

***

Hall Ticket Number :										

Code: 5GC21

R-15

I B.Tech. II Semester Supplementary Examinations December 2017

Technical English

(Common to All Branches)

Max. Marks: 70 Time: 3 Hours

Answer all five units by choosing one question from each unit (5 x 14 = 70 Marks)

****

UNIT–I

1. a) How does technology effect work-life balance as explained by E. F. Schumacher in his essay? 7M

   b) Analyse E. F. Schumacher's idea, "production by the masses" as an economic booster. 7M

OR

2. a) Why does E. F. Schumacher consider technology as inhuman? 7M

   b) Do as directed.

   i) Rewrite the words by adding suitable prefixes/suffixes in accordance with the meaning given against each:

   A. Micro----------: instrument for seeing

   B. Techno --------: a person versed in technology

   C. Geo----------: study of earth

   D. Aero----------: a mode of transport

   ii) Choose the word that is the antonym of the underlined word.

   I. My English professor gave a <u>dull</u> description.

   a. glowing b. realistic c. vivid d. visual e. bold

   II. Wall Street is a <u>crowded</u> street.

   a. lonely b. desolate c. empty d. barren e. deserted

   iii) They _____the fire in an hour. (Fill in the black with a phrasal verb with 'put') 7M

UNIT–II

3. a) What are the solutions suggested by E. K. Federov to tackle climate change? 7M

   b) What are the parameters which are responsible for the stability of climate? 7M

OR

4. a) Analyze the climate change with respect to temperature. 7M

   b) Read the following advertisement and draft a job application/cover letter.

   A well-established Information Technology company invites applications from Computer Engineers. Requirements (a) First class in B.E./B.Tech (b) One year industry experience (c) Good communication skills. Please apply with full career details to the Human Resources Manager, P.O. Box 12934. 7M

UNIT–III

5. a) What are the advanced and emerging solar technologies available in Spain? 7M

   b) Define Photovoltaic effect. Briefly explain its operation. 7M

OR

6. a) Explain the principles of a solar thermal collector. 7M

   b) Draft an e-mail to your friend describing your recent holiday experience in a hill station. 7M

UNIT–IV

7. a) What is the role of the flow of water in geological processes? 7M

   b) Why does Sir C.V. Raman call water as “elixir”? Explain the reasons. 7M

OR

8. a) How does Sir C.V. Raman poetically describe water in the beginning of the essay? 7M

   b) Write a technical report on ‘recycling’. 7M

UNIT–V

9. a) Explain the concept of ‘unattachment’ as explained by Swami Vivekananda. 7M

   b) Why does Swami Vivekananda compare human beings with tortoise? 7M

OR

10. a) Describe the work culture developed by Kalam. 10M

    b) Do as directed:

       i) Change the voice.

          a. The same day we got our puppy, Sputnik was sent into space by the Russians.

          b. The plan was approved by our clients.

       ii) Vocabulary test: In each of the following questions, out of the four alternatives, choose the one which can be substituted for the given expression.

          a. Life history of a person written by another.

             A) Bibliography B) Autobiography C) Memoir D) Biography

          b. A person who does not believe in religion

             A) Pagan B) Rationalist C) Atheist D) Philatelist 4M

***

Hall Ticket Number :										

Code: 5GC25

R-15

I B.Tech. II Semester Supplementary Examinations December 2017

Mathematical Methods –II

(Common to CSE & IT)

Max. Marks: 70 Time: 3 Hours

Answer *all five* units by choosing one question from each unit (5 x 14 = 70 Marks)

****

UNIT–I

1. a) By the method of least squares, find the straight line that best fits the following data

x:	1	2	3	4	5
y:	14	27	40	55	68

7M

b) Using the method of least squares, find the constants a and b such that $y = ae^{bx}$ fits the following data

x:	0.0	0.5	1.0	1.5	2.0	2.5
y:	0.10	0.45	2.15	9.15	40.35	180.75

7M

OR

2. By the method of least squares, fit a parabola of the form $y = a + bx + cx^2$ for the following data

x:	2	4	6	8	10
y:	3.07	12.85	31.47	57.38	91.29

14M

UNIT–II

3. a) Using Runge-Kutta method of fourth order, solve $\frac{dy}{dx} = \frac{y^2 - x^2}{y^2 + x^2}$ with $y(0) = 1$ at $x = 0.2, 0.4$ 7M

b) Solve $\frac{dy}{dx} = y^2 + x, y(0) = 1$ using Taylor's series method and compute $y(0.1)$ and $y(0.2)$. 7M

OR

4. a) Use Milne's Predictor-Corrector method to obtain the solution of the equation $\frac{dy}{dx} = x - y^2$ at $x = 0.8$, given that

$y(0) = 0.0000, y(0.2) = 0.0200, y(0.4) = 0.0795, y(0.6) = 0.1762$ 7M

b) Using Picard's process of successive approximation, obtain a solution up to fifth approximation of the equation $\frac{dy}{dx} = y + x$, such that $y = 1$ when $x = 0$. 7M

UNIT–III

5. Find the Fourier series expansion for $f(x)$ given by

$$f(x) = -®, \quad -® < x < 0$$
$$= x, \quad 0 < x < ®$$

Deduce that $\frac{1}{1^2} + \frac{1}{3^2} + \frac{1}{5^2} + \ldots\ldots\ldots\ldots\ldots = \frac{®^2}{8}$. 14M

OR

6. Obtain the Fourier series for the function $f(x)$ given by

$$f(x) = 1 + \frac{2x}{®}, \quad -® \le x \le 0$$
$$= 1 - \frac{2x}{®}, \quad 0 \le x \le ®$$

Deduce that $\frac{1}{1^2} + \frac{1}{3^2} + \frac{1}{5^2} + \ldots\ldots\ldots\ldots\ldots = \frac{®^2}{8}$. 14M

UNIT–IV

7. a) Find the Fourier cosine transform of $f(x) = \frac{1}{1+x^2}$. 7M

b) Find the Fourier sine transform of $f(x) = \frac{e^{-ax}}{x}$. 7M

OR

8. a) Find the Fourier cosine transform of $f(x)$ given by

$$f(x) = x, \quad for \;\; 0 < x < 1$$
$$= 2 - x \quad for \;\; 1 < x < 2$$
$$= 0 \quad for \;\; x > 2$$

7M

b) Find the Fourier transform of $f(x)$ given by

$$f(x) = 1, \quad for \;\; |x| < 1$$
$$= 0 \quad for \;\; |x| > 1$$

Hence evaluate $\int_0^\infty \frac{\sin x}{x} dx$ 7M

UNIT–V

9. a) Derive a partial differential equation by eliminating the constants from the equation $2z = \frac{x^2}{a^2} + \frac{y^2}{b^2}$ 7M

b) Using the method of separation of variables solve $\frac{\partial u}{\partial x} = 2\frac{\partial u}{\partial t} + u$ where $u(x,0) = 6e^{-3x}$ 7M

OR

10. a) Solve $x(y-z)p + y(z-x)q = z(x-y)$. 7M

b) Solve $p^2 + q^2 = x^2 + y^2$ 7M

***