Hall Ticket Number :										

R-15

Code: 5G523

I B.Tech. II Semester Supplementary Examinations Nov/Dec 2019

Engineering Drawing-II

(Common to EEE, ECE, CSE & IT)

Max. Marks: 70 Time: 3 Hours

Answer *all five* units by choosing one question from each unit (5 x 14 = 70 Marks)

****

UNIT–I

1. Draw the projections of a regular pentagon of 30mm side with its surface is making an angle of 30^0 with H.P. One of the sides of the pentagon is lying on the H.P and perpendicular to V.P.

OR

2. A rectangular plane of size 60 mm x30mm has its shorter side on the H.P and inclined at 30^0 to V.P. Draw the projections of the plane, if its surface is inclined at 45^0 to H.P.

UNIT–II

3. A triangular prism of base 30mm side and axis 50mm long is resting on H.P on one of its base edge such that the edge is perpendicular to V.P. Draw the projections of the solid when its axis is 45^0 inclined to H.P.

OR

4. Draw the projections of a hexagonal prism of base 25mm side and axis 60mm long, when it is resting on one of its corners of the base on H.P. The axis of the solid is inclined at 45^0 to H.P.

UNIT–III

5. Draw the projections of a cone of base 45mm diameter and axis 50mm long ,when it is resting on the ground on a point on its base circle with the axis making an angle of 30^0 with the H.P and 45^0 with the V.P.

OR

6. A hexagonal prism of base 25mm side and axis 45mm long is positioned with one of its base edges on H.P such that the axis is inclined at 30^0 to H.P and 45^0 to V.P. Draw the projections of the prism.

UNIT–IV

7. Draw the isometric view of a square prism with side of base 40mm and length of axis 70mm, when its axis is (i) vertical and (ii) horizontal.

OR

8. Draw the isometric view of a hexagonal prism of base side 25mm and height is 60mm. The prism is lying on H.P by its base and its axis is perpendicular to H.P such that one of the sides of base is parallel to V.P.

UNIT–V

9. The Figure shows a machine component. Draw its (i) Front view (ii) Top view (iii) Side view. Assume all the dimensions are in ‘mm ‘.

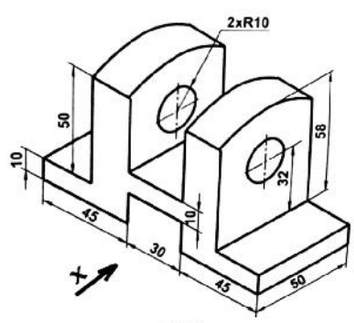

OR

10. The Figure shows an object. Draw its (i) Front view (ii) Top view (iii) Side view. Assume all the dimensions are in ‘mm ‘.

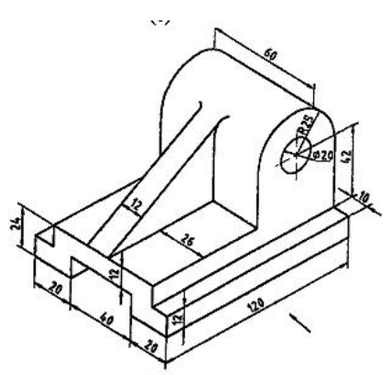

***

Hall Ticket Number :										

R-15

Code: 5GC25

I B.Tech. II Semester Supplementary Examinations Nov/Dec 2019

Mathematical Methods –II

(Common to CSE & IT)

Max. Marks: 70 Time: 3 Hours

Answer *all five* units by choosing one question from each unit (5 x 14 = 70 Marks)

****

UNIT–I

1. a) Fit a straight line for the following data

x	0	2	5	7
y	-1	5	12	20

7M

b) Determine the constants a and b by the method of least squares such that $y = ae^{bx}$ 7M

OR

2. Fit a parabola of the form $y = a + bx + cx^2$ from the following data by using the method of least squares

x	2	4	6	8	10
y	3.07	12.85	31.47	57.38	91.29

14M

UNIT–II

3. a) Find the value of y for x = 0.4 by Picard's method, given that $\frac{dy}{dx} = x^2 + y^2, y(0) = 0$ 7M

b) Solve $y' = x - y^2, y(0) = 1$ using Taylor's series method and compute y(0.1) 7M

OR

4. Solve the differential equation by using Runge-Kutta method of order - IV $\frac{dy}{dx} = \frac{y^2 - x^2}{y^2 + x^2}$ with $y(0) = 1$ at $x = 0.2,\ 0.4$ 14M

UNIT–III

5. Determine the Fourier series for $f(x) = x \sin x$ in the interval $0 < x < 2®$ 14M

OR

6. Express $f(x) = \cos x, 0 < x < ®$ in half range sine series. 14M

UNIT–IV

7. Find the finite Fourier sine and cosine transform of f(x) defined by $f(x) = x,\ where\ 0 < x < 2®$ 14M

OR

8. Find the finite Fourier sine and cosine transform of $f(x) = x^2, 0 < x < l$ 14M

UNIT–V

9. a) Solve $px + qy = pq$ 7M

b) Form a partial differential equation by eliminating the arbitrary function from $z = f(x^2 - y^2)$ 7M

OR

10. a) Solve the Partial differential equation $p\sqrt{x} + q\sqrt{y} = \sqrt{z}$ 7M

b) Solve by the method of separation of variables $\frac{\partial u}{\partial x} = 2\frac{\partial u}{\partial t} + u\ where\ u(x,0) = 6e^{-3x}$ 7M

****

Hall Ticket Number :										

R-15

Code: 5G121

I B.Tech. II Semester Supplementary Examinations Nov/Dec 2019

Data Structures

(Common to All Branches)

Max. Marks: 70 Time: 3 Hours

Answer *all five* units by choosing one question from each unit (5 x 14 = 70 Marks)

****

UNIT–I

1. a) What is a pointer? List out the advantages and disadvantages using a pointer. 7M

   b) Distinguish between call by value and call by reference by means of a program. 7M

OR

2. a) What is Dynamic Memory Allocation? Write syntax for malloc(), calloc() and free(). 7M

   b) Discuss command line arguments with an example. 7M

UNIT–II

3. a) Distinguish between Structure and Union and also mention their applications. 4M

   b) Explain Quick sort with the help of an example 10M

OR

4. a) Briefly explain File handling in C 10M

   b) Compare Linear search and Binary search. 4M

UNIT–III

5. a) What is stack? Specify any four applications where stacks are extensively used. 4M

   b) Write a routine to convert the following infix expression in to postfix expression: **a+b*c/(e+f*g)** 10M

OR

6. a) What is Queue? Specify any four applications where queues are extensively used. 4M

   b) Write a routine to implement circular queue. 10M

UNIT–IV

7. a) What is the difference between singly, doubly & circular linked lists? 7M

   b) Write a program to delete a node from the beginning of the linked list 7M

OR

8. a) Write a program to create a singly linked list in sorted order. 7M

   b) Summarize doubly linked list. 7M

UNIT–V

9. a) Explain Array representation of Binary tree 7M

   b) Define Graph and explain various graph representations. 7M

OR

10. Write the in order, preorder, and post order sequence of nodes for the following binary tree

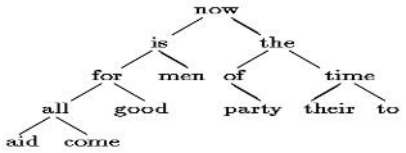

14M

*****

Hall Ticket Number :										

R-15

Code: 5GC24

I B.Tech. II Semester Supplementary Examinations Nov/Dec 2019

Engineering Mathematics-II

(Common to All Branches)

Max. Marks: 70 Time: 3 Hours

Answer *all five* units by choosing one question from each unit (5 x 14 = 70 Marks)

****

UNIT–I

1. a) changing the order of integration $\int_0^{4a}\int_{\frac{x^2}{4a}}^{2\sqrt{ax}} dy\,dx$ 7M

b) Evaluate $\int_0^1\int_1^2\int_2^3 \left(x^2y^2z^2\right)dx\,dy\,dz$ 7M

OR

2. a) Find the area of the plate in the form of a quadrant (1st quadrant)of the ellipse $\frac{x^2}{a^2}+\frac{y^2}{b^2}=1$ 7M

b) Evaluate $\int_0^1\int_0^{1-z}\int_0^{1-x-y} (x+y+z)\,dx\,dy\,dz$ 7M

UNIT–II

3. a) Find the Laplace Transform of $\left(\sqrt{t}-\frac{1}{\sqrt{t}}\right)^3$ 7M

b) Find the Laplace Transform of $f(t)=\begin{cases}2\ ,0\le t\le 1\\ 2t\ ,t\ge 1\end{cases}$ 7M

OR

4. Find $L^{-1}\left\{\frac{2s^2-6s+5}{s^3-6s^2+11s-6}\right\}$ 14M

UNIT–III

5. Solve $y''+2y'+5y=e^{-t}, y(0)=0,\ y'(0)=1$ Using Laplace Transform Technique 14M

OR

6. Using the Laplace Transform method to solve the differential equation $\frac{d^2x}{dt^2}-2\frac{dx}{dt}+x=e^t, with\ x=2, \frac{dx}{dt}=-1\ at\ t=0$ 14M

UNIT–IV

7. a) Find $div\,\overline{F}$ and $curl\,\overline{F}$ where $\overline{F}=grad\left(x^3+y^3+z^3-3xyz\right)$ 7M

b) Show that $div\left(grad\ r^n\right)=n(n+1)r^{n-2}$ 7M

OR

8. a) Evaluate $divergence\,of\left(2x^2z\,\overline{i}-xy^2z\,\overline{j}+3yz^2\,\overline{k}\right)$ at the point $(1,1,1)$. 7M

b) Show that $\nabla^2\left(\frac{1}{r}\right)=0$ 7M

UNIT–V

9. Evaluate by stoke's theorem for a vector field $\overline{F}=(2x-y)\overline{i}-yz^2\,\overline{j}-y^2z\,\overline{k}$ over the upper half surface of $x^2+y^2+z^2=1$ bounded by projection on xy-plane. 14M

OR

10. Verify divergence theorem for $\overline{F}=4xz\overline{i}-y^2\,\overline{j}+yz\,\overline{k}$ taken over the cube bounded by $x=0, x=1; y=0,\ y=1; z=0, z=1$ 14M

***

Hall Ticket Number :										

R-15

Code: 5GC21

I B.Tech. II Semester Supplementary Examinations Nov/Dec 2019

Technical English

(Common to All Branches)

Max. Marks: 70 Time: 3 Hours

Answer *all five* units by choosing one question from each unit (5 x 14 = 70 Marks)

****

UNIT–I

1. a) Why does the writer say that modern technology has become inhuman?

   b) What is the main difference between the systems of mass production and production by the masses as indicated in the passage?

OR

2. a) How does modern technology affect the earth's environment and natural resources?

   b) Do as directed in brackets.

   i. The court's decision was ***fair***. (Replace the bold and italicized word with a synonym)

   ii. They own an acre of ***fertile*** land in the village. (Replace the bold and italicized word with its antonym)

   iii. Can I have a _____ please. (Fill in the blank with either 'pear' or 'pare'.)

   iv. My pet dog has a loud ***bark***. (Write a sentence with a homonym of the italicized word)

   v. They _____ the fire in half an hour.(Fill in the blank with a phrasal verb with 'put')

   vi. The woman remembered _____ the house she grew up in. (choose between clearly/exactly)

   vii. I am not happy with my essay. I must _____ it. (A word with the prefix re-)

UNIT–II

3. a) What are the parameters responsible for the overall stability of climate in different parts of the world?

   b) What are the main ways in which human development has affected climate patterns on the earth?

OR

4. a) What are the two kinds of factors that cause the climate to change over long periods of time? Give two examples of each kind.

   b) Write a letter of application in response to an advertisement for the post of Trainee Engineer in a software company. You have a B.tech degree in IT and possess C programming skills and knowledge of Java.

UNIT–III

5. a) How does Solar Thermal Power work differently from Photovoltaic panels?

   b) Why does Spain figure among the top countries in the world as well as Europe that are using solar power?

OR

6. a) What are the two kinds of technologies currently used to generate solar power on a large scale?

   b) Re-write the following sentences as directed in brackets.

      i. The email that I sent Rita bounced.(change into a simple sentence)

      ii. In spite of raining we went shopping. (change into a compound sentence)

      iii. The squirrels hid the nuts in a hole at the bottom of the tree. (change into a complex sentence)

      iv. There is a_____ shop on the campus. (stationary/stationery)

      v. He was busy _____ over the costs. (pouring/poring)

      vi. Be careful. The book has a few _____ pages. (lose/loose)

      vii. vii. I found a _____of comics in my brother's cupboard. (hoard/horde)

UNIT–IV

7. a) What makes water one of the most powerful and wonderful things on the earth?

   b) What are some measures that are used to prevent soil erosion?

OR

8. a) How according to Sir C.V.Raman, can rain water as well as the water of rivers be prevented from going to waste?

   b) Write up a technical report on an experiment you did in one of your core subjects. Follow the style and format of a formal report.

UNIT–V

9. a) How according to Swami Vivekananda, can people be made completely free of misery?

   b) What does the essay tell us about being 'unattached' in all that we do?

OR

10. a) What is the nature of work according to the writer? In what spirit should it be done?

    b) Fill in the blanks in the sentences with words having positive connotations chosen from those in brackets.

       i. I He is a _____ lawyer. (notorious, well-known)

       ii. She is a _____ businesswoman. (shrewd, cunning)

       iii. There was a _____ breeze blowing. (cold, cool)

       iv. My aunt put her _____ arms around me. (fat, plump)

***