Hall Ticket Number :										

R-20

Code: 20AC36T

II B.Tech. I Semester Regular & Supplementary Examinations February 2023

Managerial Economics and Financial Analysis

(Common to CE & ECE)

Max. Marks: 70 Time: 3 Hours

****

Note: 1. Question Paper consists of two parts (**Part-A** and **Part-B)**
2. In Part-A, each question carries **Two marks.**
3. Answer **ALL** the questions in **Part-A** and **Part-B**

PART-A

(Compulsory question)

1. Answer ***all*** the following short answer questions (5 X 2 = 10M)		CO	BL
a) Define managerial economics.		CO1	L1
b) List the disadvantages of breakeven analysis.		CO2	L1
c) Write a short note on partnership business.		CO3	L1
d) Mention the advantages of payback method.		CO4	L2
e) State the importance of liquidity ratios.		CO5	L3

PART-B

Answer *five* questions by choosing one question from each unit (5 x 12 = 60 Marks)

		Marks	CO	BL
	UNIT–I			
2.	Explain the nature and scope of managerial economics.	12M	CO1	L1
	OR			
3.	Explain the different types of elasticity of demand with suitable examples.	12M	CO1	L2
	UNIT–II			
4.	Explain various types of internal economies of scale.	12M	CO2	L1
	OR			
5.	From the following information relating to ABC company, you are required to find out contribution, breakeven point in units, margin of safety and profit. Given Total fixed costs-Rs.4,500 Total variable costs-Rs.7,500 Total sales-Rs.25,000 Units sold-5,000	12M	CO2	L1
	UNIT–III			
6.	What is meant by perfect competition market? Enumerate on price output determination in perfect competition	12M	CO3	L1

OR

7. Evaluate the merits of sole proprietorship business. 12M CO3 L1

UNIT–IV

8. Discuss the various methods of discounted cash flow techniques. 12M CO4 L4

OR

9. A firm is considering the following project

Cash flows in Rupees					
C_0	C_1	C_2	C_3	C_4	C_5
-70,000	+10,500	+11,969	+12,129	+13,735	+14,521

Calculate NPV of the project, if the cost of capital is 12 percent 12M CO4 L4

UNIT–V

10. a) Elaborate the importance of various accounting concepts. 6M CO5 L1

b) Explain the importance of trail balance. 6M CO5 L1

OR

11. Journalize the following transactions in the books of Kumar.

April 2005

1 Kumar commenced business with Rs.15, 000.

2 Paid in to bank Rs.10, 000.

5 Purchased goods from B for Rs.5,000

9 Returned goods to B for Rs.2, 000.

14 Paid to B in full settlement of account Rs.1,5000

18 Received interest from the bank Rs.1750

21 Sold goods for cash Rs.7,000

25 Received goods worth Rs.500 from Krishna with a complaint about damage.

26 Paid salaries Rs.400 12M CO5 L3

*** End ***.

Hall Ticket Number :										

R-20

Code: 20AC31T

II B.Tech. I Semester Regular & Supplementary Examinations February 2023

Partial Differential Equations and Numerical Methods

(Common to CE and ME)

Max. Marks: 70 Time: 3 Hours

****

Note: 1. Question Paper consists of two parts (**Part-A** and **Part-B)**
2. In Part-A, each question carries **Two mark.**
3. Answer **ALL** the questions in **Part-A** and **Part-B**

PART-A

(Compulsory question)

		CO	BL
1.	Answer ***all*** the following short answer questions (5 X 2 = 10M)	CO	BL
a)	Write the Newton-Raphson formula to the approximate root of the equation f(x)=0. Also explain when Newton-Raphson method fails?	CO1	L2
b)	Find the interpolating polynomial for the data (1, 2) and (2, 4).	CO2	L2
c)	State the Simpson's 1/3rd & 3/8th rule for evaluating $\int_{x_0}^{x_n} f(x)dx$	CO3	L1
d)	Briefly explain the Runge-Kutta method of fourth order.	CO4	L2
e)	Write the all possible solutions of 2D-Laplace equation.	CO5	L3

PART-B

Answer *five* questions by choosing one question from each unit (5 x 12 = 60 Marks)

			Marks	CO	BL
		UNIT–I			
2.	a)	Find the root of equation $x^3 - 2x - 5 = 0$ using the bisection method correct to three decimal places	6M	CO1	L3
	b)	Find the fourth root of 32 correct to four decimal places by choosing regula-falsi method.	6M	CO1	L4
		OR			
3.	a)	Using Newton Raphson method, find a real root of the equation $x\sin x + \cos x = 0$.	6M	CO1	L3
	b)	Find a root of $x^3 - x - 1 = 0$ by choosing Iteration method.	6M	CO1	L4
		UNIT–II			
4.	a)	Estimate the value of *f* (22) from the following data.			

X	20	25	30	35	40	45
f(x)	354	332	291	260	231	204

6M CO2 L3

b) The population of a town in decimal census was as given below. Estimate the population for the year 1955.

Year x	1921	1931	1941	1951	1961
Population y	46	66	81	93	101

6M CO2 L3

OR

5. a) From the following table, estimate the number of students who obtained marks between 40 and 45.

Marks:	30-40	40-50	50-60	60-70	70-80
No. of students:	31	42	51	35	31

6M CO2 L4

b) Using Lagrange's interpolation formula, calculate y(2) from the table

x	0	1	3	4
y	-12	0	12	24

6M CO2 L4

UNIT–III

6. Given that

x:	1.0	1.1	1.2	1.3	1.4	1.5	1.6
f(x):	7.989	8.403	8.781	9.129	9.451	9.750	10.031

Find $\frac{dy}{dx}$ and $\frac{d^2y}{dx^2}$ at x =1.0 12M CO3 L4

OR

7. a) Evaluate $\int_0^{\frac{®}{2}} \sqrt{\cos^{-}}\, d^{-}$ by dividing the integral into 6 parts using trapezoidal rule and Simpson's 1/3rd rule. 6M CO3 L3

b) Evaluate $\int_0^6 \frac{dx}{1+x^2}$ Using Simpson's 3/8th rule. 6M CO3 L3

UNIT–IV

8. a) Apply Euler's method to find y for $x = 0.1$ for $\frac{dy}{dx} = x + y + xy, \quad y(0) = 1,$ taking step size 0.025. 6M CO4 L3

b) Given $\frac{dy}{dx} = x + y^2, y(0) = 1, \quad h = 0.2$, Calculate $y(0.2)$ using Runge Kutta method. 6M CO4 L4

OR

9. a) Find the value of y for x = 0.1, by Picard's method, given that $\frac{dy}{dx} = \frac{y-x}{y+x}, y(0) = 1.$ 6M CO4 L4

b) Solve by Taylor's series method the equation $\frac{dy}{dx} = \log(xy)$ for $y(1.1)$, given $y(1) = 2.$ 6M CO4 L3

UNIT–V

10. A string is stretched and fastened at two point l apart. Motion is started by displacing the string in the form $y = a\sin\left(\frac{®x}{l}\right)$ from which it is released at time t = 0. Show that the displacement of the string $y(x,t) = a\sin\left(\frac{®x}{l}\right)\cos\left(\frac{®ct}{l}\right).$ 12M CO5 L2

OR

11. An infinitely long plane uniform plate is bounded by two parallel edges and an end at right angles to them. The breadth is π; this end is maintained at a temperature u_0 at all points and other edges are at zero temperature. Determine the temperature at any point of the plate in the steady state. 12M CO5 L4

*** End ***

Hall Ticket Number :										

R-20

Code: 20A132T

II B.Tech. I Semester Regular & Supplementary Examinations February 2023

Strength of Materials

(Civil Engineering)

Max. Marks: 70 Time: 3 Hours

****

Note: 1. Question Paper consists of two parts (**Part-A** and **Part-B)**

2. In Part-A, each question carries **Two mark.**

3. Answer **ALL** the questions in **Part-A** and **Part-B**

PART-A

(Compulsory question)

1. Answer ***all*** the following short answer questions (5 X 2 = 10M) CO BL

a) Define resilience 1 2

b) Define Shear force and bending moment 2 2

c) Write down the formula to find the section modulus of rectangular section. 3 2

d) State Mohr's theorems 4 2

e) Define thin shells 5 2

PART-B

Answer *five* questions by choosing one question from each unit (5 x 12 = 60 Marks)

Marks CO BL

UNIT–I

2. a) Deduce the relation between the Modulus of Elasticity and Modulus of Rigidity from fundamentals 4M 1 3

b) The Modulus of rigidity for a material is 0.51×10^5 N/mm^2. A 10mm diameter rod of the material was subjected to an axial pull of 10 kN and the change in diameter was observed to be 3×10^{-3} mm. Calculate Poisson's ratio and the modulus of elasticity 8M 1 2

OR

3. A mild steel bar 20 mm diameter and 400 mm long is enclosed in a copper tube of 50 mm outside diameter and 25 mm inside diameter. The composite bar is heated through 50^{0C}. Determine the stresses induced in each metal. Determine also the extension of the composite bar. Hence calculate the axial thrust P required to nullify the extension. The elastic modulus and coefficient of thermal expansion for steel are 200 GPa and 11.7×10^{-6} per °C respectively and for copper 70 GPa and 21.6×10^{-6} per °C respectively 12M 1 4

UNIT–II

4. Determine the bending moment and shear force values for the given beam and draw the BMD and SFD

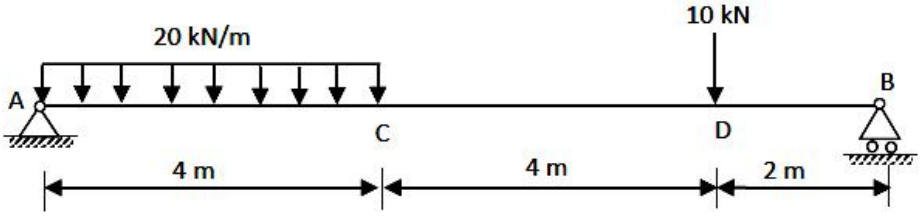

12M 2 4

OR

5. Determine the bending moment and shear force values for the given beam and draw the BMD and SFD

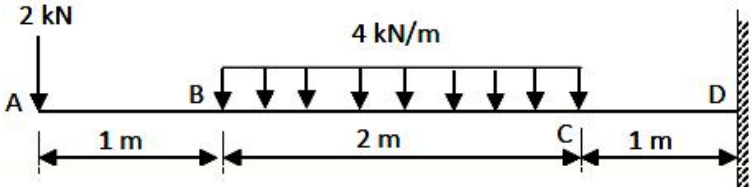

12M 2 3

UNIT–III

6. A cantilever beam, 50 mm wide by 150 mm high and 6 m long, carries a load that varies uniformly from zero at the free end to 1000 N/m at the wall: (i) Compute the magnitude and location of the maximum flexural stress. (ii) Determine the type and magnitude of the stress in a fiber 20 mm from the top of the beam at a section 2 m from the free end 12M 3 4

OR

7. Derive an expression for the distribution of shear stress across the cross section. How average shear stress is defined? And relate maximum shear stress to the average shear stress in a rectangular section? 12M 3 3

UNIT–IV

8. A simply supported beam of span 5 m, carrying a point load of 5 kN at a distance of 3 m from the left end. Find deflection under the load and maximum deflection. Take E= $2x10^5$ N/mm^2 and I = 1x108 mm^4. 12M 4 2

OR

9. A cantilever beam of span 7 m carries a point load of 15 kN at a distance of 4 m from the right end. Compute (a) the slope (b) the deflection under the load (c) the maximum deflection and its location. Take E = 1.5 x 105 N/mm^2 and I=5 x 108 mm^4 12M 4 4

UNIT–V

10. A thick spherical shell of 100 mm internal diameter is subjected to an internal fluid pressure of 30 N/mm2. If the permissible tensile stress is 80 N/mm2, find the thickness of the shell. 12M 5 3

OR

11. If the principal stress at a point in an elastic material are 2f tensile, 1.5f tensile and f compressive, calculate the value of ‘f’ at failure according to the maximum principal strain theory. The elastic limit in simple tension is 210 N/mm2 and poisson’s ratio is 0.30 12M 5 4

*** End ***

Hall Ticket Number :										

R-20

Code: 20A131T

II B.Tech. I Semester Regular & Supplementary Examinations February 2023

Advanced Surveying

(Civil Engineering)

Max. Marks: 70 Time: 3 Hours

****

Note: 1. Question Paper consists of two parts (**Part-A** and **Part-B)**
2. In Part-A, each question carries **Two mark.**
3. Answer **ALL** the questions in **Part-A** and **Part-B**

PART-A

(Compulsory question)

1. Answer ***all*** the following short answer questions (5 X 2 = 10M) CO BL

a) Describe the principle of surveying 1 4

b) What is magnetic meridian? 1 1

c) What are the temporary adjustments of the theodolite? 3 1

d) What is Tacheometry? 4 2

e) Write a short note on parallax Bar. 5 1

PART-B

Answer *five* questions by choosing one question from each unit (5 x 12 = 60 Marks)

Marks CO BL

UNIT–I

2. A survey line PQ intersects a pond. To overcome these obstacles, two stations A and B were taken on either side of the pond. A line AC, 90 m long was laid down on the left of AB, and a second line AD, 130 m long was laid down on the right of AB. If points C,B and D are on the same straight line and CB=75 m and BD=78 m, determine the length of AB. 12M 1 4

OR

3. List the various types of errors in plane tabling. And also state the precautionary measures to overcome them. 12M 1 3

UNIT–II

4. The following consecutive readings were taken with a dumpy level and 4m levelling staff on a continuously sloping ground at 30 m intervals. 0.680, 1.455, 1.855, 2.330, 2.885, 3.380, 1.055, 1.860, 2.265, 3.540, 0.835, 0.945, 1.530 and 2.250. r.L of the starting point was 80.750 m. Determine the R.L of various staff stations and enter in a level book. 12M 2 4

OR

5. Describe the three indirect methods of locating contours. 12M 2 4

UNIT–III

6. Describe about temporary and permanent adjustments of a theodolite. 12M 3 4

OR

7. Explain how you would measure horizontal angles by theodolite (repetition and reiteration) 12M 3 2

UNIT–IV

8. Stadia readings were taken with a theodolite on a vertical staff with the telescope inclined at an angle of depression of 3° 30´. The staff readings were 2.990, 2.055 and 1.120. The reduced level of the staff station is 100.0 m, and the height of the instrument is 1.40 m. What is the reduced level of the ground at the instrument? Take constants as 100 and zero. 12M 4 3

OR

9. A tachometer is setup at an intermediate point on a traverse course PQ and the following observations are made on a staff held vertical.

Staff Station	Vertical Angle	Staff Intercept	Axial Hair Readings
P	+8° 36´	2.350	2.105
Q	+6° 6´	2.055	1.895

The constants are 100 and 0. Compute the length PQ and the reduced level of Q. RL of P = 321.50 m. 12M 4 3

UNIT–V

10. a) Write about setting up and orientation of total station. 6M 5 2

    b) Elaborate safe alignment, existing alignment. 6M 5 3

OR

11. a) What is total station, what are various functions of total station? 6M 5 2

    b) Enumerate the instrumental errors in DGPS. 6M 5 2

*** End ***

Hall Ticket Number :										

R-20

Code: 20A133T

II B.Tech. I Semester Regular & Supplementary Examinations February 2023

Fluid Mechanics and Hydraulic Engineering

(Civil Engineering)

Max. Marks: 70 Time: 3 Hours

****

Note: 1. Question Paper consists of two parts (**Part-A** and **Part-B)**
2. In Part-A, each question carries **Two mark.**
3. Answer **ALL** the questions in **Part-A** and **Part-B**

PART-A

(Compulsory question)

1. Answer ***all*** the following short answer questions (5 X 2 = 10M)	CO	BL
a) Differentiate Newtonian fluids and Non-Newtonian fluids	1	L2
b) Define stream function and Velocity potential	2	L2
c) Define Bernoulli's equation and mention its applications	3	L2
d) Explain the concept of branched and equivalent pipe.	4	L3
e) Explain the characteristic curves of pumps	5	L3

PART-B

Answer *five* questions by choosing one question from each unit (5 x 12 = 60 Marks)

		Marks	CO	BL
	UNIT–I			
2. a)	A pressurized tank contains oil (SG = 0.902) and has a square, 0.6-m by 0.6-m plate bolted to its side, as is illustrated in Fig. 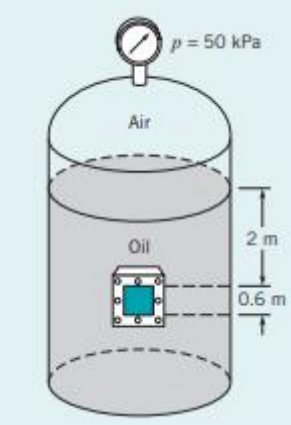 The pressure gage on the top of the tank reads 50 kPa, and the outside of the tank is at atmospheric pressure. Estimate the magnitude and location of the resultant force on the attached plate?	6M	1	L4
b)	Define pressure. Obtain an expression for the pressure intensity at a point in a static fluid.	6M	1	L2
	OR			
3. a)	Derive an expression for the force exerted and centre of pressure for a completely submerged inclined plane surface?	6M	1	L2
b)	U-tube manometer containing mercury was used to find the negative pressure in the pipe containing water. The right limb was open to the atmosphere. Find the vacuum pressure in the pipe if the difference of mercury level in the two limbs was 100 mm and height of water in the left limb from the Centre of the pipe was found to be 40 mm below.	6M	1	L4
	UNIT–II			
4. a)	The components of a velocity field are given by $u=x+y$, $v=x^3y+16$ and $w=0$. Determine the location of any stagnation points (V=0) in the flow field.	6M	2	L4

b) Water at 0.1 m^3 /s and alcohol (SG=0.8) at 0.3 m^3 /s are mixed in a y-duct as shown in Fig.

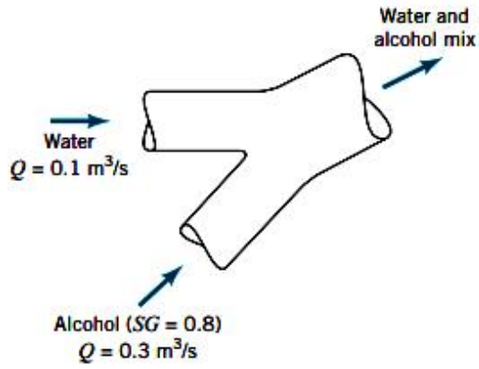

What is the average density of the mixture of alcohol and water? 6M 2 L4

OR

5. a) The diameters of a pipe at the sections 1 and 2 are 10cm and 15cm respectively. Find the discharge through the pipe if the velocity of water flowing through the pipe at section 1 is 20 m/s. determine also the velocity at section 2. 6M 2 L4

b) Derive an expression for three-dimensional continuity equation for fluid flow. State necessary assumptions 6M 2 L4

UNIT–III

6. a) Derive Impulse-Momentum equation 5M 3

b) A horizontal venturimeter with inlet and throat diameters 30 cm and 15 cm respectively is used to measure the flow of water. The reading of differential manometer connected to inlet and throat is 10 cm of mercury. Determine the rate of flow. Take Cd = 0.98. 7M 3 L4

OR

7. a) The rectangular channel in Fig. contains a V notch weir as shown. The intent is to meter flow rates between 2.0 and 6.0 m^3/s with an upstream hook gage set to measure water depths between 2.0 and 2.75 m. What are the most appropriate values for the notch height and the notch half-angle?

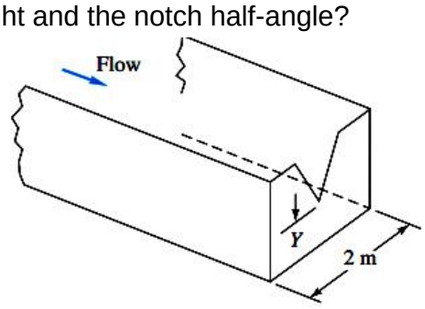

8M 3 L4

b) Discuss the different types of notches and weirs 4M 3 L2

UNIT–IV

8. Derive Hazen-Poiseuille equation for laminar flow in circular pipes 12M 4 L3

OR

9. a) Explain about Hydraulic Gradient Line and Total Energy Line 4M 4 L2

b) A compound pipe system consists of 1600 m of 0.6 m, 1200 m of 0.5 m, and 800 m of 0.3 m new cast iron pipe connected inseries. Convert the system to (i) an equivalent length of 0.4 m pipe (ii) equivalent size pipe of 2500 m long 8M 4 L4

UNIT–V

10. a) Discuss various efficiencies of a Centrifugal pump 4M 5 L2

b) The interrnal and external diamters of the impeller of a centrifugal pump are 200 mm and 400mm respectively. The pump is running at aspeed of 1000RPM. The vanes of the impeller at inlet and outlet are 20 and 30 respectively. Waterenter the pump radially and velocity of flow is condstant. Determine workdone by the impeller per unit weight of water. 8M 5 L4

OR

11. Design a Pelton wheel for the following specifications (Consider K_{v1}=0.985 and K_{u1}=0.45) Shaft power = 12000 kW, head = 400 m and speed =800 RPM overall efficiency=80%, Jet diameter should not exceed one fifth of wheel diameter. Determine Wheel diameter, jet diameter and number of jets necessary 12M 5 L4

*** End ***