Hall Ticket Number :										

R-11

Code : 1G561

III B.Tech. II Semester Supplementary Examinations December 2015

Instrumentation and Control Systems

(Mechanical Engineering)

Max. Marks: 70 **Time: 03 Hours**

Answer *any five* questions

All Questions carry equal marks (14 Marks each)

****

1. a) What do you understand by the term transducer, how are they classified?
   b) Explain with a neat sketch the principle of working of a LVDT and sketch the input output graph.

2. a) Explain with a neat sketch the constructional features and working principle of McLeod gauge used for the measurement of low pressure?
   b) List the types of thermal conductivity gauges. Explain their operation in the measurement of low pressure?

3. a) Explain the principle of radiation and optical pyrometers.
   b) Sketch and explain the principle of working of,
      (i) Turbine flow meter
      (ii) Electromagnetic flow meter

4. a) Explain the principle of working of load cells using strain gauges?
   b) Define and distinguish between force and torque. Name the different types of dynameters?

5. a) What are the requirements of strain gauges? Explain the term cross sensitivity.
   b) Explain full Wheatstone bridge method to determine the change in resistance of gauge when subjected to strain.

6. a) What are the different types of control systems? Explain them with block diagram?
   b) What are main functions of servomechanism explain with neat sketch?

7. a) Write brief notes on the steady state errors and error constants?
   b) Derive the transfer function for thermal system.

8. a) What are the necessary conditions of stability? Write short notes on Routh-Hurwitz stability criterion?
   b) Find the roots of the characteristic equation for system whose open loop transfer function is G(s)H(s)= $\frac{1}{(s+2)(s+4)}$

      Locate the roots in s-plane and indicate the stability of the system.

***

Hall Ticket Number :										

R-11

Code : 1G562

III B.Tech. II Semester Supplementary Examinations December 2015

CAD / CAM

(Mechanical Engineering)

Max. Marks: 70 **Time: 03 Hours**

Answer *any five* questions

All Questions carry equal marks (14 Marks each)

****

1. a) Define CAD/CAM and discuss about product life cycle with a neat sketch. 7M

   b) Discuss the basic structure of a CPU and explain about various types of mass storage devices 7M

2. a) Find the transformed coordinates when a square [(1,1), (2,1), (1,2) & (2,2)] is rotated by 90^0 anticlockwise about a line passing through one of its vertex (1,1) and parallel to x-axis. Solve the problem by homogeneous transformations. 8M

   b) Classify various types of geometric commands and explain about display control commands. 6M

3. a) What is a Bezier Surface? Discuss about the properties of Bezier Surface 6M

   b) A parametric cubic curve passes through the points (0,0), (2,4), (4,3), (5, -2) which are parameterized at u = 0, ¼, ¾ and 1 respectively. Determine the geometric coefficient matrix and slope of the curve when u = 0.5. 8M

4. a) Discuss about the various types of design criteria used in the designing of structure of a CNC machine tool. 4M

   b) Write a complete APT part program for the following component shown in Fig.1 using an end mill cutter of diameter 20 mm. Clearly show the axes system chosen with a sketch and the direction of the cutter for the motion statements.

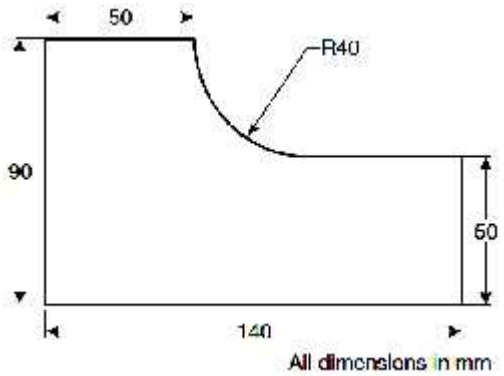

Fig.1 10M

5. a) What is meant by parts classification and coding? Mention various types of parts classification & coding systems 4M

   b) Explain the working of a variant CAPP system 5M

   c) Develop the opitz form code (first 5 digit) with justification for the component shown in Fig. 2. below

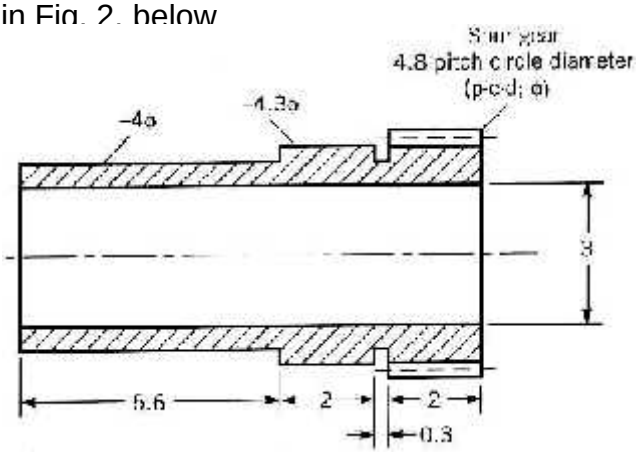

Fig. 2 5M

6. a) Define FMS and classify various types of FMS systems 4M

   b) What is meant by JIT? Explain the working of a JIT system 5M

   c) Discuss the role of various computer control systems in manufacturing 5M

7. a) What is meant by capacity planning? Explain its role in a manufacturing system 4M

   b) With a neat sketch explain three phases in a shop floor control system 5M

   c) Define CIM and enumerate the various benefits of CIM 5M

8. a) Distinguish between contact and non-contact inspection systems 4M

   b) Classify various types of CMM's with neat sketches 6M

   c) Discuss the integration of CAQC with CAD/CAM 4M

***

Hall Ticket Number :										

R-11

Code : 1G565

III B.Tech. II Semester Supplementary Examinations December 2015

Design of Machine Elements-II

(Mechanical Engineering)

Max. Marks: 70 **Time: 03 Hours**

Answer *any five* questions

All Questions carry equal marks (14 Marks each)

****

1. A single row deep grove ball bearing is subjected to a 30 seconds work cycle that consists of the following two parts:

	Part I	Part II
Duration (Secs)	10	20
Radial load (kN)	45	15
Axial Load (kN)	12.5	6.5
Speed (rpm)	720	1440

The static and dynamic load capacities of ball bearing are 50kN and 68kN respectively. Calculate the expected life of the bearing in hours.

2. The following data is given for the piston of a four stroke diesel engine:

Cylinder bore =250 mm
Material of piston rings = grey cast iron
Allowable tensile stress = 100 MPa
Allowable radial pressure on cylinder wall = 0.03 MPa
Thickness of piston head = 42 mm
Number of piston rings = 4

Design the Piston (Assume the any data needed).

3. Design a connecting rod for a high-speed IC engine using the following data:

Cylinder bore = 125mm, Length of connecting rod = 300mm,
Max gas pressure = 3.5MPa, length of stroke = 125mm,
Mass of reciprocating parts = 1.6kg, Engine speed = 2200 rpm.
Assume suitable data and state the assumptions made.

4 For a square 50x50 mm cross-section, find the maximum tensile and Compressive stress if P = 9.5 kN and plot the total stress across the cross section

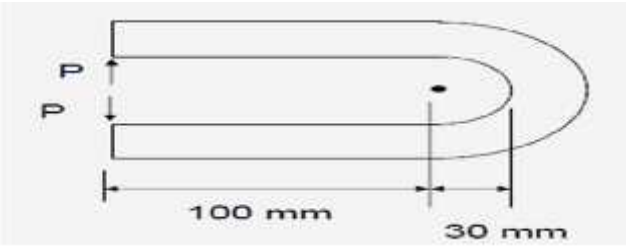

5. A 100mm wide and 10 mm thick belt transmits 5kW of power between two parallel shafts. The distance between the shaft centers is 1.5m and the diameter of the smaller pulley is 440mm. The driving and the driven shafts rotate at 60 rpm and 150 rpm respectively. The coefficient of friction is 0.22. Find the stress in the belt if the two pulleys are connected by

   i. Open belt drive and

   ii. Cross belt (Take μ = 0.22)

6. A helical gear pair has to reduce speed from 500 rpm to 100 rpm for 12 hours running time per day continuously. The pinion is of 40 Ni 14 steel and 40 teeth and the wheel is of 40C8 steel normalized and has 200 teeth. The gears are of 6 mm module, 100 mm face width, 30° helix angle and 20° pressure angle. Determine power rating based on strength and wear.

7. a) Derive an expression for energy stored in springs

   b) A helical spring made from a wire of 6 mm diameter and has outside diameter of 75mm. if the permissible shear stress is 350MPa and modulus of rigidity 84 kN/mm^2,find the axial load which the spring can carry and deflection per active turn

   i) Neglecting the effect of curvature

   ii) Considering curvature effect

8. The lead screw of a lathe has single start ISO metric trapezoidal threads of 52mm Nominal diameter and 8mm pitch. The screw is required to exert an axial force of 2kN in Order to drive the tool carriage during turning operation. The thrust is carried on a collar of 100mm outer diameter and 60mm inner diameter. The values of coefficient of friction at the screw threads and the collar are 0.15 and 0.12 respectively. The lead screw rotates at 30 rpm. Calculate:

   i. The power required to drive the lead screw

   ii. The efficiency of the screw

***

Hall Ticket Number :										

R-11

Code : 1G566

III B.Tech. II Semester Supplementary Examinations December 2015

Industrial Management

(Mechanical Engineering)

Max. Marks: 70 **Time: 03 Hours**

Answer *any five* questions

All Questions carry equal marks (14 Marks each)

****

1. a) Explain the functions of management 7M

   b) Explain Maslow's need Hierarchy theory. 7M

2. a) Explain briefly committee organizations. State the advantages and disadvantages 7M

   b) Explain line and staff organization with the help of a chart. 7M

3. a) What is the significance of Travel chart in layout design? 6M

   b) Explain the factors effecting the site selection for locating a factory. 8M

4. a) Define work measurement and state its objectives and goals. 7M

   b) "Critical examination is a motive force to develop a new method". Justify. 7M

5. a) Explain the functions of purchase department. 7M

   b) What are the various costs associated with inventory and explain briefly continuous and periodical review control systems. 7M

6. a) List out the differences between CPM and PERT. 4M

   b) The utility data for a network are given below. Determine the total, free, independent and interfering floats and identify the critical path.

Activity:	0–1	1–2	1–3	2–4	2–5	3–4	3–6	4–7	5–7	6–7
Duration:	2	8	10	6	3	3	7	5	2	8

10M

7. a) What is mission, initiatives and core concepts of TQM? 6M

   b) A sub-group of 5 items each are taken from a manufacturing process at a regular interval. A certain quality characteristic is measured and $\bar{X}$ and R values computed. After 25 subgroups it is found that $\Sigma\bar{X}$ = 357.50 and ΣR = 8.80. If the specification limits are 14.40± 0.40; and if the process is in statistical control, what conclusions can you draw about the ability of the process to produce items within specifications? (For subgroup of 5 items, d_2 = 2.326). 8M

8. a) Explain different Merit Rating methods. 7M

   b) What are the differences between marketing and selling concepts? 7M

***

Hall Ticket Number :										

R-11

Code : 1G563

III B.Tech. II Semester Supplementary Examinations December 2015

Metrology and Surface Engineering

(Mechanical Engineering)

Max. Marks: 70 **Time: 03 Hours**

Answer *any five* questions

Use of Tolerance tables is permitted

All Questions carry equal marks (14 Marks each)

****

1. a) Determine maximum and minimum allowances resulting in a fit $30H_7d_8$. 7M

   b) Explain Maximum material condition and minimum material condition. Explain applications of these concepts. 7M

2. a) Enumerate the possible errors in end standards. How calibration of slip gauges is made? 7M

   b) Internal taper of a circular hole in a work piece is to be determined with help of standard rollers depth and height gauges. Propose scheme and derive taper measurement expression for it. 7M

3. a) Explain the principle of interferometer with neat line diagrams. Give applications of Optical flat. 7M

   b) Explain working principle of auto collimetor with neat diagram. Explain its use in the measurement of flatness. 7M

4. a) Explain numerical assessment of surface roughness. What are the disadvantageous to use CLA as compared RMS in the measurement of Surface roughness? 7M

   b) Explain working principle of pneumatic comparator and compare its feature with other comparators. 7M

5. a) What do you mean by a drunken thread? How it is produced? 7M

   b) When measuring a major diameter of external screw thread gauge, a 35mm diameter cylindrical standard was used. The micrometer readings over a standard gauge were 9.3768mm and 11.8768mm respectively. Calculate thread gauge major diameter. 7M

6. a) List and Explain various alignment tests on a lathe machine. 7M

   b) What are common alignment errors on machine tools? Briefly discuss how they are tested. 7M

7. a) Describe the constant chord method of gear measurement along with mathematical expressions. 7M

   b) Draw a typical graph obtained in a gear roller tester. Locate the position of maximum tooth load on the same graph, 7M

8. a) List out mechanical surface treatment processes and compare them with chemical treatment processes. 7M

   b) Why thermal modifications of surfaces are important? Explain some of thermal modification surface properties.

***

Hall Ticket Number :										

R-11

Code : 1G564

III B.Tech. II Semester Supplementary Examinations December 2015

Thermal Engineering-III

(Mechanical Engineering)

Time: 3 hours **Max Marks: 70**

Answer any FIVE of the following
All questions carry equal marks (14 Marks each)

* * * * *

1. a) Explain Inter cooling Method for Open Cycle Gas Turbine 6M

   b) The following data refers to a closed cycle gas turbine plant:
   Atmospheric air temperature is 30 ^{0} C, Max temperature of the cycle is 900 ^{0} C, Pressure at compressor inlet is 1 bar, Pressure ratio is 5, Compressor efficiency is 85 %, Turbine efficiency is 80 %, CV of fuel is 42,000 kJ/kg, Combustion loss is 10 % of heating value. Calculate Compressor work, Turbine work, Net work output, Work ratio, Cycle efficiency. 8M

2. a) Explain Thrust augmentation methods for Jet Propulsion systems. 8M

   b) Explain the essential differences between rocket propulsion and turbojet propulsion 6M

3. a) Derive an expression for COP of Bell-Coleman cycle of air refrigeration 7M

   b) Differentiate between simple air refrigeration and Boot strap air refrigeration system 7M

4. a) Describe the mechanism of a simple Vapour Compression Refrigeration System 6M

   b) Discuss the effects of the following. on the performance of VCR system
   (i) Suction pressure (ii) Discharge pressure (iii) Superheating (iv) Sub- cooling 8M

5. a) Briefly explain the four basic components of an absorber machine 4M

   b) In an absorption type refrigerator, the heat is supplied to ammonia generator by condensing steam at 3 bar and 95% dry. The temperature to be maintained in the refrigerator is -6^{0}C. The temperature of the atmosphere is 35^{0}C. Find the theoretical COP. If the refrigeration load is 30 TR and actual COP is 80% of the maximum COP. Find the mass of the steam required per hour. 10M

6. a) Define specific humidity and derive an expression for specific humidity in terms of total pressure of the humid air and partial pressure of water vapour 8M

   b) Differentiate between ventilation load and infiltration load. 6M

7. a) What are the different methods of humidifying the air? Explain the working of any one of the atomizing the water type humidifier. 7M

   b) Draw the heat pump circuit used for juice concentration and describe the process. 7M

8. a) Define "Human Comfort" and explain the factors which affect human comfort. Also draw Human Comfort chart. 6M

   b) Explain an Air-Conditioning system which is used in locomotives throughout the year. 8M

***